Cetan-Standard

FULL THROTTLE AERIAL

www.fta-uas.us

Cetan's aerodynamic designed carbon fiber frame puts it in a class of its own. The way it doesn't hang; but rather stand in the air makes it highly weather proof. The Cetan is both wind and rain resistant which means it can operate at continuous wind speeds of 30 knots and with rain up to 9mm/h.

This sUAS platform has been uniquely configured to provide superior performance and efficiency greater than that of any other sUAS system on the market today.
The four motor system is powerful enough to lift the most advanced payloads on the market today while maintaining a 4.3:1 power-to -weight ratio at MTOW.

With an AES 256 encryption, the aircraft,data, and its systems are 100% secure.

To maximize operational time the sUAS has a quick release quick battery rack and quick charge (30 minutes to full charge) battery charging system. Additionally, it can be paired to a tether system for unlimited mission time.

Cetan

GENERAL SPECIFICATIONS

Rotor to Rotor Diagonal:
39 inches (1000mm)

Diameter with Propellers:
50.75 In. (1289mm)

Max Gross take-off Weight:
26.2 Pounds

Maximum Payload Capacity:
12.5 Pounds

Maximum Downfall:
10 mm/h, 30mm/3h

Maximum Wind Gusts:
33 Knots

Maximum Wind Speed:
27 Knots

Battery Power System:
(1) MaxAmps 22000mAH 40C Battery

Operating Voltage:
22.2 Volts 6S

Maximum Battery Voltage:
25.2 Volts

Average Flight Duration:
42 Minutes w/4 lb payload

Flight Control System:
Cube Orange H7

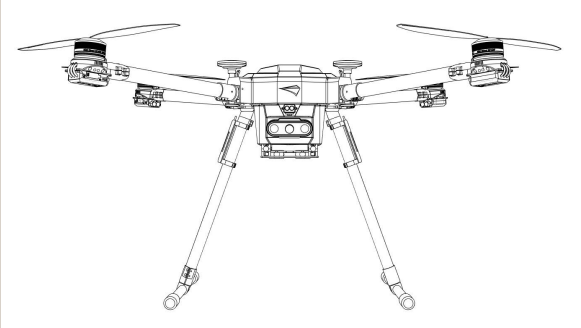

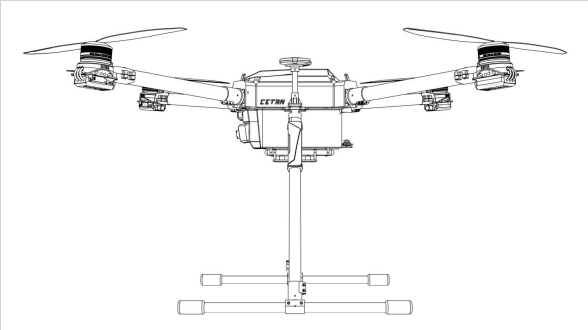

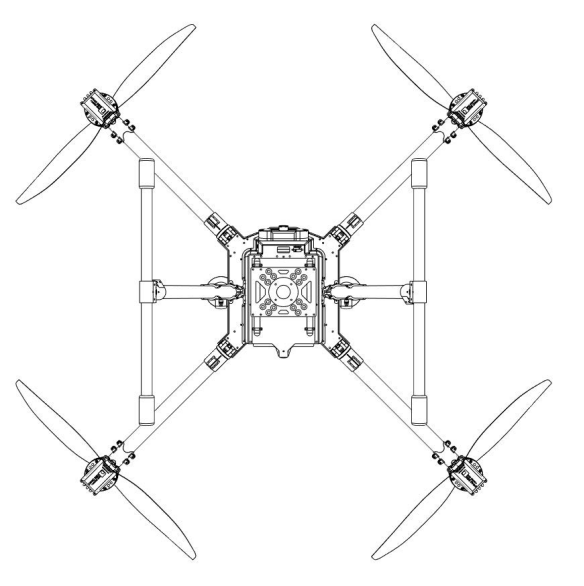

Cetan

AIRFRAME

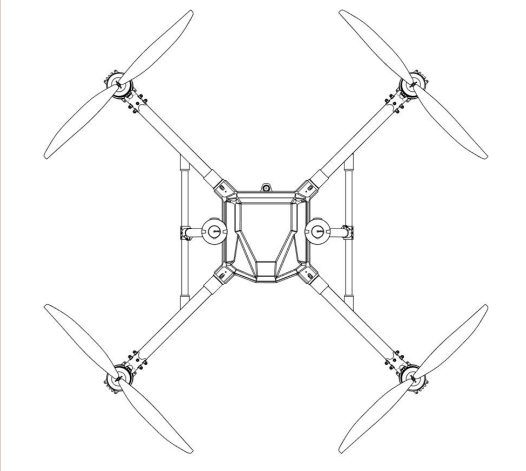

Dimensions:

Frame: (LxWxH) 693x682x524 mm

Rotor to rotor diagonal: 1000mm

Diameter with propellers: 1289 mm

Height up to payload bracket: 318 mm

Ground clearance bottom prop: 388 mm

Gremsy T3 (version 3) is the most advanced 3-axis camera stabilizer ready to fly with many industrial cameras for inspection, mapping and other demanding applications. Featuring onboard HDMI and AUX ports, the T3 ensures simple and clean setup as well as increased portability for your system. Not only providing built-in bluetooth functionality for optimal comfort during your setup control, we make your plug & play installation easier within 2 seconds. With Gremsy T3, adapting to various aerial missions has never been so fast and straightforward.

FLIGHT CONTROL

HereLink

Herelink is an integrated remote controller, ground station and wireless digital transmission system designed to be used with the Cube Autopilot, Ardupilot or PX4. Herelink allows RC control, HD video and telemetry data to be transmitted upto 20km between the ground station and air unit, the Herelink remote controller features custom Solex TX and QGC applications and both air unit and ground station feature an integrated 8 core SOC for custom application development.
Herelink 1.1 is based on the original platform and functions of Herelink 1.0. The controller improved the display brightness up to 1000 nit. Moreover, an additional Ethernet interface is available on airunit1.1 to support more peripheral devices and adapt to more applications, a SD card slot is available on the airunit 1.1.

Processor:
SoC – Pinecone S1SOC
4 *Cortex A53, 2.2GHz / 4 * Cortex A53, 1.4GHz GPU
4 Core, Mali-T860 SDR A7 + DSP

Memory:
Airunit LPDDR3 1GB | Controller LPDDR3 2GB Storage
Airunit EMMC: 4GB|Controller EMMC：8G

Transmission Distance:
FCC 20km | CE / SRRC / MIC 12km

Video Delay:
110 ms

Image resolution:
720p@30fps | 1080p@30/60fps

Frequency Band:
2.4GHz ISM

Receive sensitivity:
-99dBm@20MHz BW

Recovery:
< 1ms

Cetan

Cube/Nvidia Flight Control

Configuration	Specifications
	**Cube Orange H7** Equipped with High Performance H7 Processor H7 has double-precision (DP) FPU, 1MB RAM, and 400MHz CPU processor provides high performance, extremely fast operation, and stable solution for flight.
	**Optional AI platform:** One-stop solution for drone developers combining the best features of Nvidia Jetson NX and The Cube autopilot with the AI ready autonomous software stack, rich connectivity and various payload support. Designing and developing of enterprise-grade autonomous drones has never been easier. It is time to focus on your drone based applications!
	Delivered ready to embed and develop Autonomous drone software stack with fast learning curve Ready to use hardware and rich accessory and payload support
	**BUILT IN LTE AND WIFI** Internet connectivity straight from the very first power up. • SBUS input • 16 PWM output channels • 2x LTE antenna sockets (MIMO) • WiFi Antenna socket (AP & Station modes) • 4G and 5G Connectivity • SATCOMM Ready

Cetan

OPTIONAL TETHERED CONFIGURATION

ELISTAIR - LIGH-T-4

LIGH-T-4 is a rugged tethered drone station, offering extended possibilities for police forces, first responders and drone operators requiring a permanent aerial position.

Designed to withstand harsh transport conditions and deployable on any type of terrain, LIGH-T-4 can be operational in less than one minute through its Dual Mode Tether Management.

The tether system is also equipped with "Powerline" technology so that data can be transferred through the tether for real time data collection.

Technical Specifications

Tether Length	- 328ft (100m)	Tensile Strength	- 100daN
Micro-tether Weight	- 0.11oz/ft (10.5 g/m)	Total Weight	- 44lb (40kg)
Output voltage	- 6S or 12S	Dimensions	- 21”x 16” x 10”
Power Output	- 2500W (peak)		
Data Speed	- Up to 200 Mb/s		
Power Input	- 110-250 VAC (50-60 Hz)		

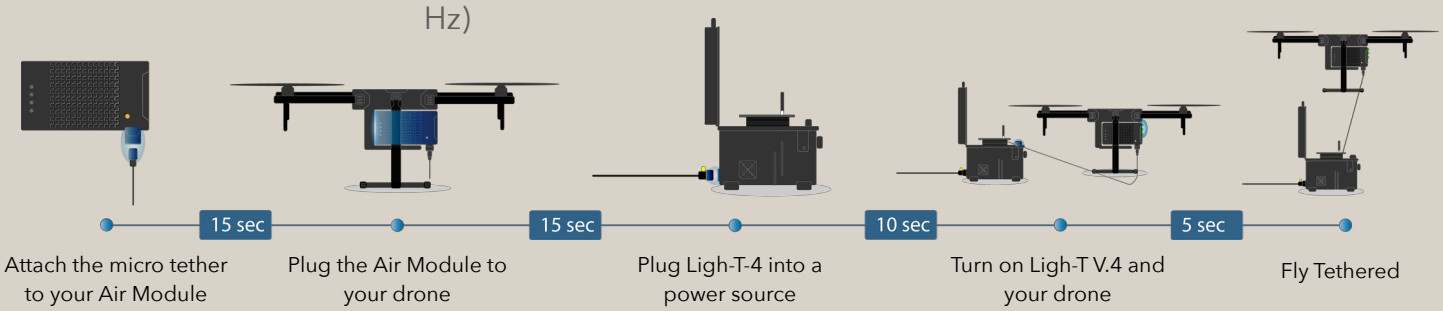

CONTACT

Cetan

To maximize the safety and effectiveness of your mission, Cetan is not only easy to deploy and simple to use; it is also configured with the most advanced flight control system and artificial intelligence technology available on the market today. To discuss options not detailed in this spec sheet, please contact us directly.

Contact us at
ProgUSA LLC
356 Harbour Isle Way
Longwood (Orlando), FL 32750

Tech Center:
311 Altamonte Commerce Blvd, Unit 1618
Altamonte Springs, FL 32714
info@progusa.net
407 332 8678